Design And Fabrication

Of

Compact Paper Recycling Machine

PROJECT REPORT

SUBMITTED IN PARTIAL FULFILMENT FOR THE AWARD OF THE DEGREE OF

Bachelor of Technology

In

Mechanical Engineering

Submitted by

Saurabh Sharma, 14MEB460

Anurag Sharma, 14MEB310

Gaurav Kumar, 14MEB007

Under the Supervision of

Ateeb Ahmad Khan

Department of Mechanical Engineering

Zakir Husain College of Enginnering and Technology

Aligarh Muslim University, Aligarh

2017-18

CERTIFICATE

It is to certify that this project report entitled "**Design And Fabrication Of Compact Paper Recycling Machine**" submitted by **Mr. Saurabh Sharma (14MEB460), Mr. Gaurav Kumar (14MEB007) and Mr. Anurag Sharma (14MEB310)** students of **MECHANICAL ENGINEERING** at **Zakir Husain College of Engineering & Technology,AMU,Aligarh** for the partial fulfillment of the requirement for the award of Bachelors of Technology (MECHANICAL) Degree is a record of students own study carried under my supervision & guidance.

This report has not been submitted to any other university or institution for the award of any degree.

(Ateeb Ahmad Khan)

Department of Mechanical Engineering,

Aligarh Muslim University, Aligarh.

ACKNOWLEDGEMENT

We would like to express our gratefulness to our supervisor **Mr Ateeb Ahmad Khan** Assistant Professor, Department of Mechanical Engineering, Aligarh Muslim University, Aligarh for his guidance, support and constant encouragement. His deep insight and broad knowledge provided us valuable inputs and helped us to achieve success so far. Despite busy schedule, he was always there to guide us. His constant feedback, constructive criticism has been the key to completion of project work till now. We also highly appreciate the resources he provided with and that too conveniently.

We are also thankful to the scholars and authors whose work we have referred in our project.

(Saurabh Sharma) (Anurag Sharma) (Gaurav Kumar)

Abstract

Due to lack of proper waste collection channels we lose a major portion to landfills. The amount of imported waste paper is greater than indigenously collected paper. So, instead of throwing away the waste paper in trash, recycling can be adopted. In institutes like offices, schools, colleges and industries the paper recycling machine can be used to reduce paper waste and cost saving. The main benefit of recycling is double decrease of the environmental load.

Designing automatically operated compact recycling machine which can be used to simply the process and reduce the production cost of paper. The machine is designed with essential sections to carry out the process. The 3-D modelling is done in CATIA and the machine will be fabricated accordingly.

Key Words: *Compact machine, drying, modelling, paper recycling, pulping, sheet formation.*

Table of Contents

S No	Description	Page No.
1.	Introduction	8
2.	Literature survey	13
3.	Problems encountered in INDIA	16
4.	Problem Formulation and Methodology	17
5.	Description and general layout of machine unit	18
6.	Working of machine	20
7.	Unit design	23
8.	Main assembly	29
9.	Component List	30
10	Cost Analysis	31
11.	Advantages & Disadvantages	32
12	Conclusion	33
13.	References	34

Notation / Symbols /Abbreviations

Λ	Lead Angle
φ_n	Pitch Angle
Γ	Lewis Factor
C'	Velocity factor
C_1	Dynamic Load Capacity
N_g	Gear speed
N_w	Worm Speed
S_0	Permissible Stress
L_{10}	Rated life
V_P	Pitch Line Velocity
F_T	Thrust Force
M	Module
VR	Velocity Ratio
P_r	Radial Load
B	Face Width
SAE	Society Of Automotive Engineering

List Of Tables and Figures

Table / Figure No	Description	Page No
Table 1	Shift in raw material consumption pattern	9
Table 2	Current Waste Paper Collection Mechanisms in India	11
Table 3	Recovery Potential for Waste Paper	12
Table 4	Component List	30
Table 5	Cost Analysis	31
Figure 1	Pulp Container	20
Figure 2	Seive Drum	21
Figure 3	Rollers	22
Figure 4	Main Frame	23
Figure 5	Main Assembly (a) 2 D (b) 3 D	29

CHAPTER 1 : INTRODUCTION

Paper is an essential part of our lives. We use paper in everyday chores. It is used for documentation of the data and packaging. The paper and pulp industry is one of the major manufacturing industries and also a significant employment provider across the globe.The papermaking process is believed to have its origin in China about 100 AD by Cai Lun during the rule of Han Dynasty. He created a sheet of paper using mulberry and other best fibres along with fishnets, old rags and hemp waste. Modern papermaking began in the early 19th century in Europe with the development of the Fourdrinier machine, which can produce a continuous roll of paper rather than individual sheets. These machines are considerably large, up to 150 m in length, produce up to 10 m wide sheet, and running around 100 km/h. in 1844, Canadian inventor Charles Fenerty and German inventor F.G. Keller had invented the machine and associated process to make use of wood pulp papermaking. This would end the nearly 2,000 year use of pulped rags and start a new era for the production of newsprint and eventually almost all paper was made out of pulped wood. The first paper recycling mill was named The Neckinger Mill and was setup by Matthias Koops in 1826.

The paper making process is essentially a very large dewatering operation where diluted solution of pulp suspension with less than 0.5% solid fibre is used. The process of paper recycling consists of following sections: - pulping, forming, pressing and drying. In the process of pulping, paper is soaked in large pulpers which contain water and chemicals. The pulpers shred the paper into smaller pieces and heating of the paper mixture further increases the rate of breaking down of paper into paper fibres. The paper mixture turns into a mushy mix, known as pulp. Deinking is also done in this section. It removes ink and glue from the paper fibres by floatation process with the help of foam. In the forming process fibres in diluted pulp stock form the sheet through drainage due to gravity. In press rolling, additional water is removed by mechanical pressure applied through the nips of a series of presses or rollers. In drying section steam heated cylinders are used to papermaking.

The paper manufacturing industry faces major problem of unavailability of raw material. The primary raw material being wood is of great environmental concern. So industries have focused on using waste paper as raw material. In paper recycling process we utilise of

used paper instead of wood for fibre. Shredded paper is used for making pulp in recycling process.

According to the discussion on collection and recycling in India: 1 ton of recycled paper saves about 17 trees, 2.5 barrels of oil, 4100 kW-hr of electrical energy and 4 m3 of landfill. And 1 ton of waste paper recycling results in saving 70% of raw material, 60% of coal, 43% of energy and 70% water. Apart from this paper recycling also offers opportunity for providing additional income and employment.

The Indian paper industry uses wood, agricultural residues and waste papers as raw material. In the early 70s the share of raw material used was only about 7% whereas in 2011 it was about 47% in total production. In 2011 about 550 paper mills in India used waste paper as primary fibre source for paper. These papers were acquired indigenously as well as from foreign exports. In 2011 waste paper utilisation of paper in paper mills of India was about 3 million tonnes, which translates into a total recovery of only 27% of the total paper consumption.

Table 1: Shift in raw material consumption pattern [13]

Year	**% Share**		
	Wood	***Agro residue***	***Waste paper***
1970	84	9	7
2000	39	31	30
2011	31	22	47

This recovery rate is very low compared to other developed countries like Germany-73%, Sweden-69%, Japan-60% and USA-49%. Due to lack of indigenous waste paper, Indian mills rely heavily on imported waste paper to meet the raw material demand. According to an estimate, India imports around 4 million tonnes of waste paper annually, which is about 57% its total requirement; this is estimated to be over 11 million tonnes by 2025.

The reason behind India's low recovery rate is due to loop holes in the segregation process of waste paper from household, offices and other waste generating sources. According to Table 2 and 3, only 20% of writing and printing paper office and household are recovered and only 50% of packaging papers are recovered and only 30% of newspapers are recovered. So, there

is a large potential for recovery of waste paper in India. The unrecovered waste paper is used for land filling. The current scenario of paper recycling in India asks for a better solution for increasing the recycling rate. So, in this project we aim to design and fabricate a compact paper recycling machine.

Table 2: Current Waste Paper Collection Mechanisms in India [13]

Source	**Item collected**	**Collected by**	**Quantity collected (in million tonnes/annum)**
Collection from households	Old newspaper and magazines	Weekend hawkers	1.50
Notebook and textbooks			0.50
Annual scrap contracts of printers, publishers and converters	Paper trimmings, print rejects, overprint/misprint sheets and other	Contractors	0.25
Scrap contracts with industries, office, libraries	Old corrugated cartons, examination answer sheets, library records, old office and library records etc.	Contractors	0.50
Total			2.75

Table 3: Recovery Potential for Waste Paper [13]

Grades of Paper	**Potential Source of Generation**	**Generation/ Consumption %**	**Type of Waste**	**Collection Rate %**
Writing/Printing				
Copier Paper	Offices Business Establishment Others	50 40 10	Post Consumer	20
Cream Wove	Printing House Paper Traders	20 5	Pre-Consumer	100
	Households Schools/Colleges Offices Business Establishment Others	20 10 25 10 10	Post Consumer	20
Packaging Paper	Converting House	15	Pre-Consumer	100
	Business Households Offices Establishment Others	20 5 50 10	Post Consumer	50
Newspaper	Publishing House Distributors	20 5	Pre-Consumer	100
	Households Offices Business Establishment Others	40 10 15 10	Post Consumer	30

CHAPTER 2 : LITERATURE SURVEY

Antonio Davila (1988) states in his paper that plastics as a contaminant not only scratch the sheet but may also cause breaks in pressing and drying section. He concluded that most effective method for quantifying plastic contaminants with the exception of polyacetate is screening.

Gary M. Scott and Said Abubakr (1994) studied that recycling efforts of recovered paper and waste woods are hampered by the degradation by repeated paper making process. They concluded that fractionation is successful at separating recycled paper into two or more fractions with different fibre properties.

Shaun Anthony Reardon (1994) covers different parameters related to paper making such as achievable machine speed, Specific steam consumption, boundary conditions, etc. In his method numerous variables have been researched and the mathematical model has been tested against actual machine data and found to predict moisture content within several percent.

Said Abubakret-al (1995) investigates the use of fractionation to increase the utilisation of office recovered paper by upgrading the quality of fibre. They found that the long fibre component resulting from fractionation was significantly upgraded compared to the short fibre fraction.

C. Jiang and J. Ma (2000) investigates about flotation process in detail which is widely used in industry for deinking almost all types of papers. It also tells about chemicals used in flotation process, factors affecting the flotation. They figured out that flotation process is a widely used process for deinking in mass productive industries. In modern time there are various conventional methods are also used for deinking.

Patricia Lynn Brown (2004) describes the condition of OSU, still water campus and determines the output of white paper into the waste stream. The case study gives idea about the percentage of white paper discharge into the stream.

Zhong Zhuang et-al (2005) studied paper pulp industry in China based on industrial level data. He concluded that lack of high quality raw material remains main constraint for Chinese pulp and paper industry.

M.A. Olutoye (2005) designed and studied manually operated paper recycling machine was design. His study suggested that development of manually operated paper recycling machine is much cheaper than the automated industries.

R.A. Venditti (2006) evaluate new type of surfactants based on renewable materials for used in ink removal for recycled paper via flotation deinking. He comes on conclusion after study that the alteration of model ink surface can be investigated by measuring contact angle of water on the model ink after exposure to different surfactant solution.

ZeljkaBarberic-Mikocevic (2007) experimented Recycling of paper printed with color laser printer XEROX PHASER 770 has been investigated. The recycling was performed by chemical deinking with double stage flotation with the usage of non ionic surfactant. The efficiency of the process has been increased by double stage flotation.

Freedonia Group (2008) studied the different chemicals used in paper manufacturing. This paper stresses on fillers, binders, coating pigments, bleaching and deinking.

Amol A. Kalage, et-al (2009) studied the application of FPGA based solution to be used on design stage of the algorithm for fast realization.

The system reduces the time and algorithm was working as expected without any modification in hard Government of India. (2011), it discusses the scenario of paper recycling in India. It concludes that only 27% of waste paper is recycled in India and about 57% waste paper is imported for recycling process.

Ajit K Ghosh (2011) studied a process in which Contact drying with steam heated cylinders method of drying is used. Besides conductive heat transfer between hot cylinder surface and the wet web, the role of air that is either the drying medium or surrounds the drying atmosphere is very significant. Final moisture content of finished product is between 6% and 8%.

IvetaČabalová et-al (2011) studied the environmental effect of paper recycling. Concluded that use of this model can bring indirectly benefit to the environment as well as improve the quality of waste paper reaching the recycling unit. Repeatedly used fibres do not fully regenerate their properties, so they cannot be recycled again and again.

Kirabira John Baptist et-al (2013) studied various pulp materials from wood as the major source of pulp for paper making to non wood materials such as agricultural food crop

residues, grasses, shed tree leaves, fibrous shells of fruits and others. There is a turning point in terms of raw material for the manufacturing of pulp and paper. He concluded that there is a need to identify more non-wood materials with high potential for pulp and paper production.

Dr. Ravi Goyal, Anurag Joshi, et-all (2015) studied cold rolling mill roll deformation, it covers different parameters affecting the roller and contributing to the damage occur to it. Deformation due thermal breakages, fire cracks, fatigue, wear and friction of rolls.

Devendra Kumar and R.K. Mandloi (2016) his study presents the review of belt conveyor design modifications and latest technologies or methodologies used in different application. Belt conveyors are widely used as continuous transportation equipment.

Vrushabh R. Rathod et-al. (2016) designing manually operated small-scaled paper recycling plant, which can be used in schools and colleges, ensures that a cheap and non-complex method of production of paper product is guaranteed. The fabricated machine can serve dual purposes, it can be manned permanently at a stationary position or it could be shifted from one place to another as the case may be.

Metin Yılmaz (2016), analyzed in regard to recycling and strategic plans are suggested. Proper sorting of waste paper at origin would decrease the cost of chemicals and energy consumption.

CHAPTER 3 : Problems encountered in INDIA

In India only about 30% of total waste paper is recycled. The problems that exist are:

• Paper mills do not have all the process of paper recycling incorporated in one.

• Separate process plant leads to delay in delivery of raw material for next stage due to transportation.

• Paper mills require large floor area.

• Due to large floor area paper mills are located at outskirts of city away from waste generation zone. So transportation costs are high.

Therefore, we need to overcome form such typical conditions and we should come up with a solution to increase the percentage of paper recycled.

CHAPTER 4 : Problem formulation and Methodology

- To design a paper recycling machine which is
  I. Compact
  II. Portable
  III. Economical
- To reduce the delay between waste paper collection and recycling.
- To do 3-D Modelling and fabrication of the machine.

Methodology

The steps in paper recycling process are:

- **Pulping**: Shredded paper along with warm water is fed into the pulper. Pulper blends the solution of paper and water along with binder and deinking and whitening agents. In pulper paper fibre are separate from each other and a thin solution of paper pulp is formed.
- **Forming**: Pulp from the pulper flows down through valve on the felt conveyor. Some fraction of water is drained due to gravity through felt mesh.
- **Press Rolling**: Felt conveyor moves through series of rollers and due to pressing by rollers water is squeezed out. Sheet of recycled paper will be formed. Roller pairs will be followed by idler rollers. Only one roller will be driver roller and rest will be driven due to motion of felt.
- **Drying**: After sheet formation felt will be passed through a heated roller and then to air blower section, which will evaporate the water left in the sheet and finally dry sheet will be obtained.

CHAPTER 5 : Description and general layout of machine unit

The manually operated paper recycling machine unit broadly consists of the following four systems:

- **Pulp feeding system:** It consists of the sieve drum, drum case and the pickup roller. Its function is the preparation of pulp slurry and feeding it.
- **Pulp transferring system:** It consists of the nylon felt conveyor and the set of idlers. It function is to transfer the slurry to the calendaring system.
- **Calendaring system:** It consists of two calendar rollers. Here the pulp gets calendared to paper and then the paper is removed out.
- **Driving mechanism:** It consists of an electric motor, a gear box and a pulley-belt drive.

The bulk of the parts of the unit were fabricated using mild steel, this is because it is the easiest to be joined among all other metals. It is a very versatile metal, necessitating its use by many industries for fabrication of process unit equipment. Apart from its versatility, it is also very cheap and readily available compared to other metals.

The following figure shows the general layout of the various components of the machine unit. The driving mechanism (motor, gear-box, belt and pulley) is not shown.

5.1. Salient Features Of Machine Unit:

- Size of paper sheets to be made – approx. 297 x 210 mm (A4 size)
- No. of sheets taken out per batch – 3
- Speed of calendar drum from which paper is removed off – 18-20 rpm

The batch size implies the maximum no. of paper sheets of the given size that can be taken out in one complete revolution of the calendar drum.

The major dimensions of the various components of the unit are based on these three parameters. The size of each paper sheet and the no. of sheets per batch give the dimension of the calendar roller. Correspondingly, the dimensions of the other main rollers (the power-driven calendar roller, the sieve drum and the pickup roller) have been determined.

It is to be noted that, the thickness of the paper to be obtained is decided by the no. of turns the calendar drum is allowed to make before peeling off the paper from it (provided the feed is constant and consistent). Fresh layer of pulp gets coated over the previous layer with every

new turn. Greater the no. of turns given before removing the paper, thicker is the final paper obtained.

CHAPTER 6 : WORKING OF MACHINE

6.1. Preparation of Pulp Slurry:

The raw material for the paper recycling plant unit is paper pulp slurry. It is a mixture of approx. 50% pulp and 50% water. Generally, for big paper recycling plants, the source of raw material is the waste paper pulp from paper industry. But, as the machine unit fabricated under this project is of small scale and is meant for reusing and recycling the waste papers generated in a school or college, pulp slurry can be prepared locally. Additives can also be added to slurry to obtain certain desired properties of the paper.

6.2. From Pulp to Paper:

- After the preparation of slurry, it is transferred into the sieve drum case. The drum case consists of a sieve drum. The function of the sieve drum is to transfer the pulp onto the conveyor belt.
- **Working of sieve drum -** Sieve drum is a hollow cylindrical drum whose entire lateral surface is covered with a sieve-like mesh. It has rectangular slots cut onto its lateral surface to allow flowing of water through it. This drum is fitted inside the drum case.

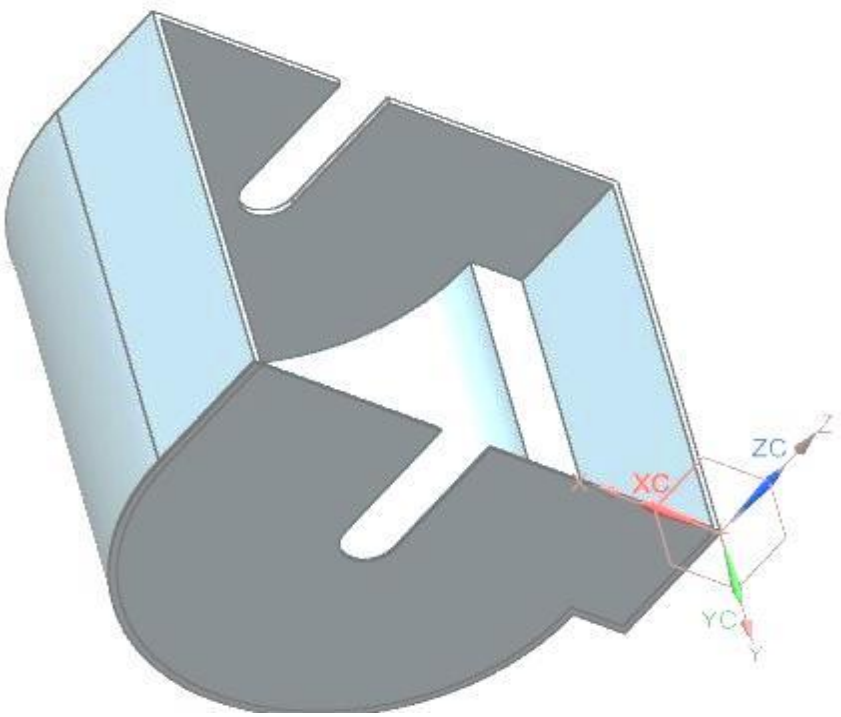

Figure 1 : Pulp container

The sieve drum keeps rolling in the drum case continuously at very small speed. The pulp slurry is fed to the small V-shaped collecting chamber which is a part of the drum case. As the drum is continuously rolling against the press roller **(pick-up roller)**, the pulp gets stuck on the conveyor belt which is passes between the two drums. The pick-up roller is rubber coated to increase friction on its surface so as avoid slippage of the belt.

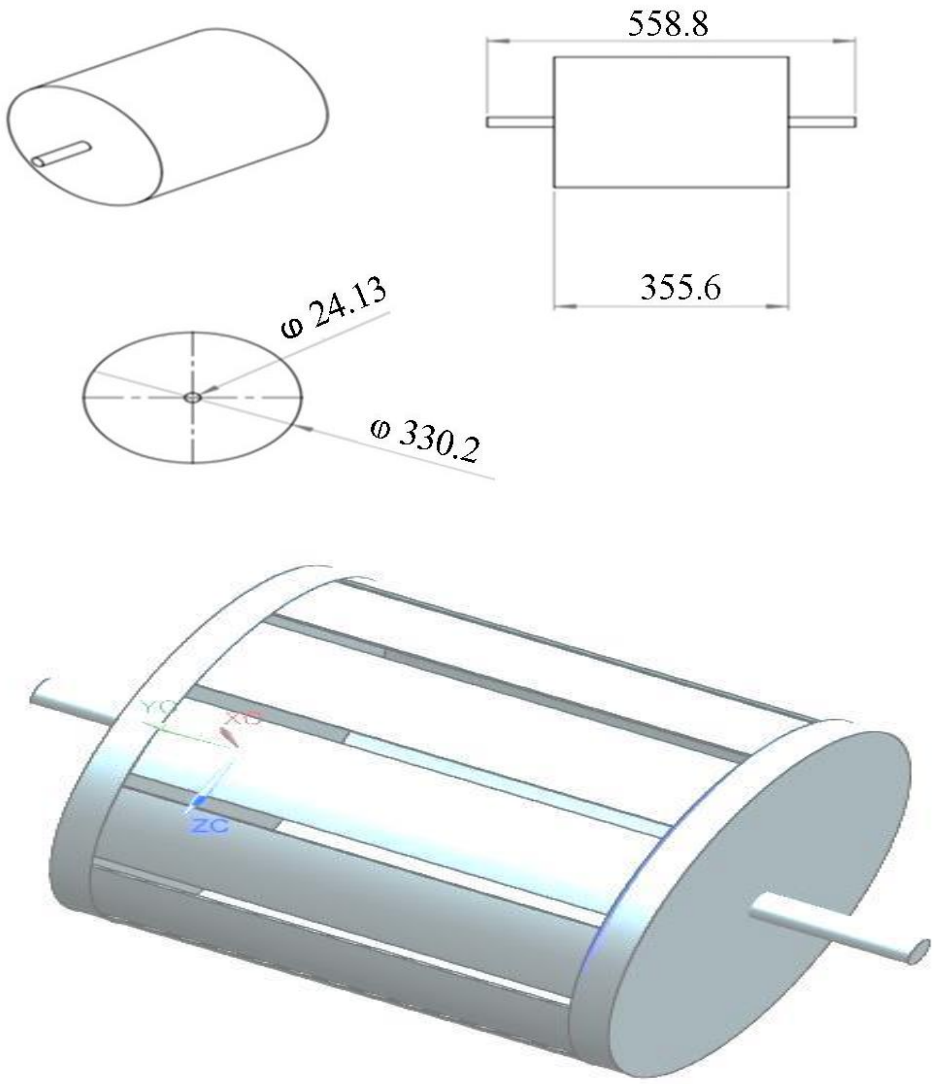

Figure 2 : Seive Drum

Felt conveyor - The felt conveyor assists the flow of pulp. It is made up of nylon. The conveyor carries the pulp to a set of **calendar rollers** which comprises of two rollers - one of diameter bigger than the other. The belt passes between the two rollers and the paper gets stuck on the roller which is rolling.

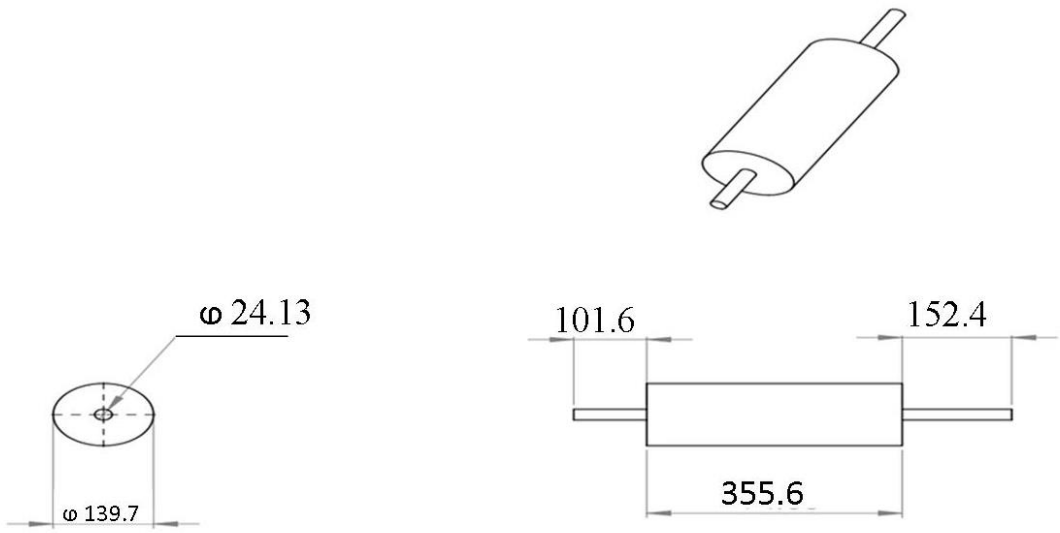

Figure 3: Rollers

The smaller roller is the driven roller i.e. the **electric motor** shaft is connected to this roller shaft. This roller drives the other rollers, the idlers and the sieve-drum. This roller is rubber coated.

ii. pair of arms carrying the pickup roller

These pivots enable the arms to make small angular motion about the joint. This flexibility is necessary as these arms have springs hooked to them.

CHAPTER 7 : UNIT DESIGN

7.1. Main Frame:

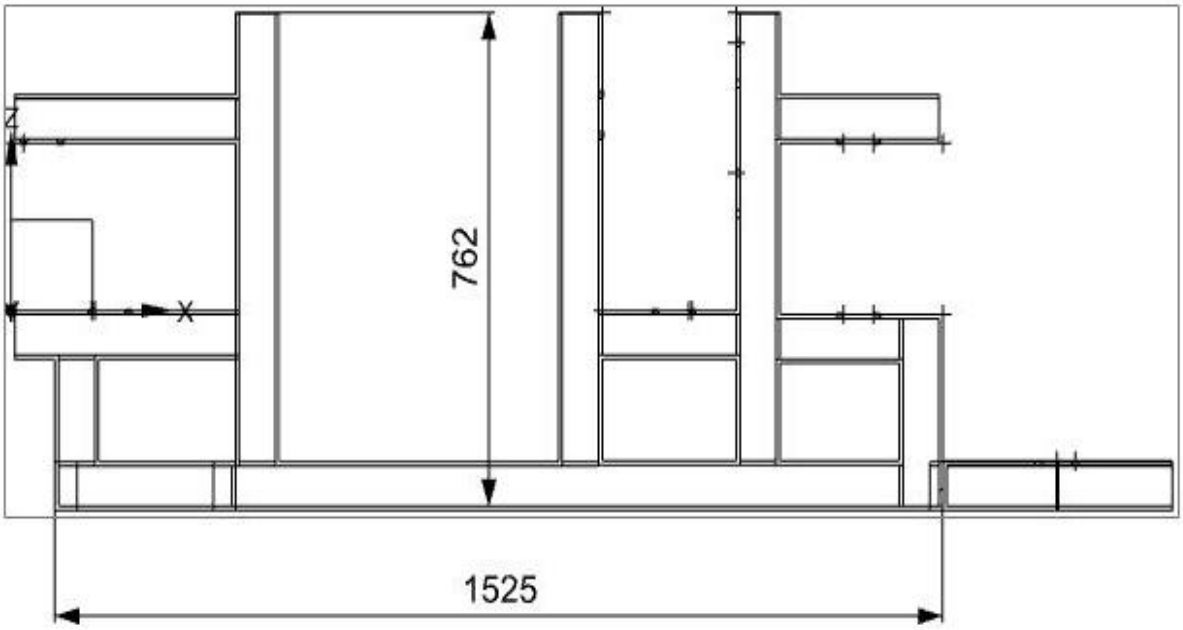

Figure : 4(a)

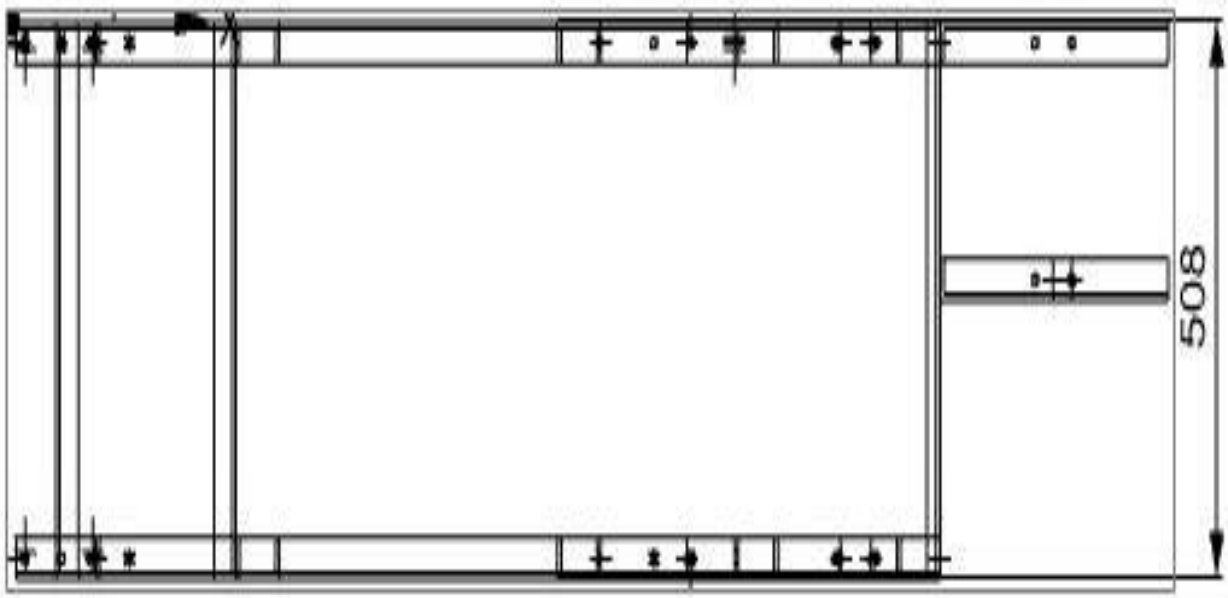

Figure : 4(b)

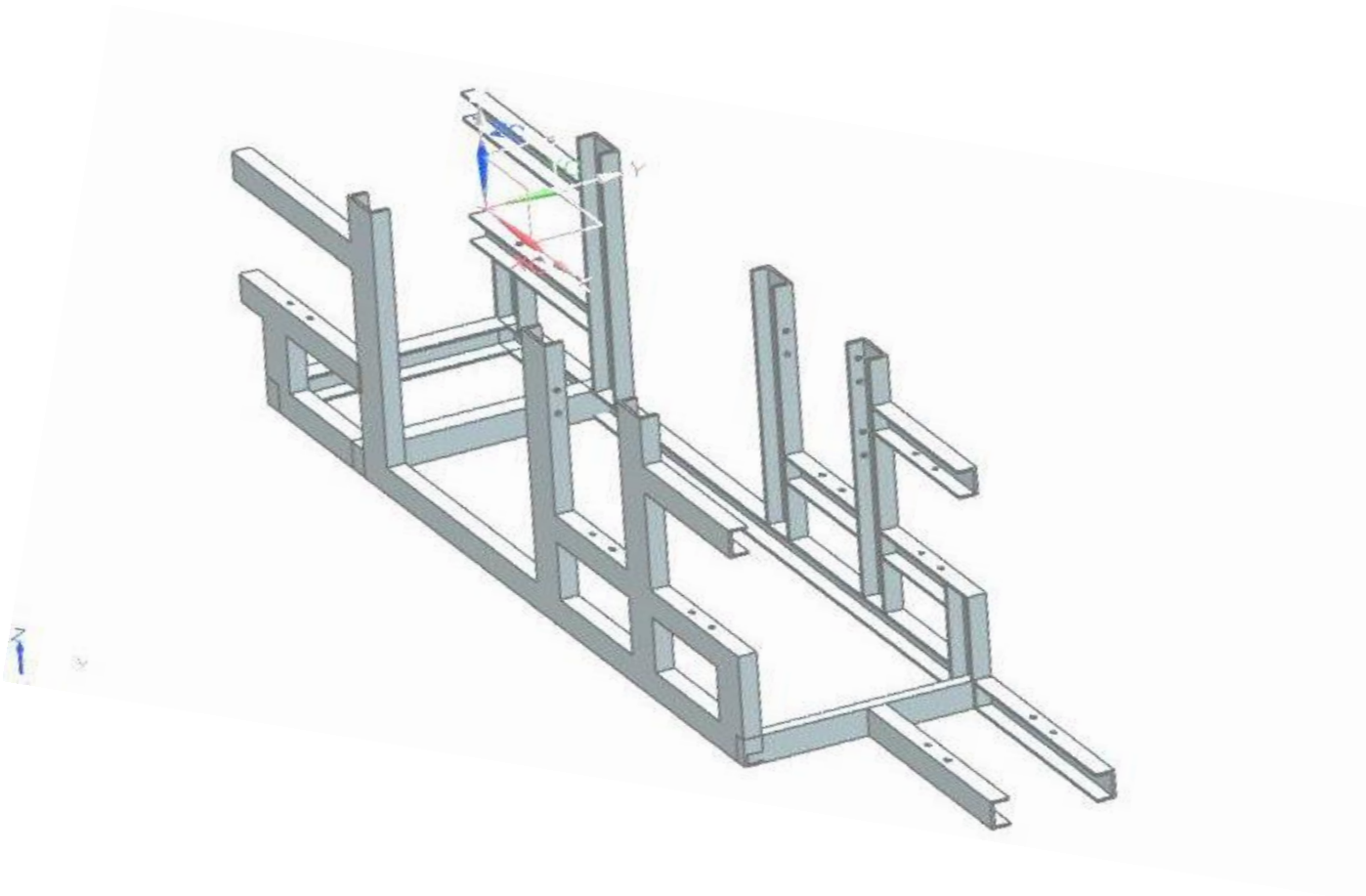

Figure : 4(c)

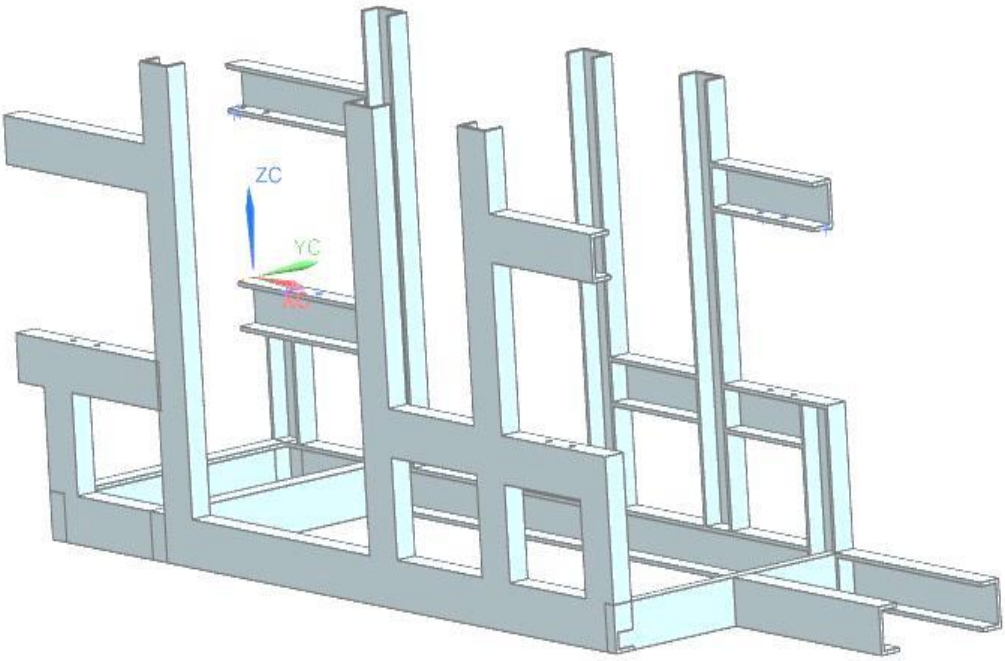

Figure : 4(d)

Figure 4(a,b,c,d) : Different Views of Main Frame

7.2. Design of Gear Box:

The gear box has to make a speed reduction of 42:1. This reduction is made in two stages:

- Stage 1: Worm and worm-gear drive (reduction of 24:1)
- Stage 2: Spar gear drive (reduction of 1.7:1)

7.3. Design of worm gear drive:

We have, power to be transmitted P_R = 0.746 KW. It is assumed that the shafts of the gears are 225mm apart. The transmission ratio is 24:1 It is assumed that the gear is made of phosphor bronze.

Step 1. Selecting no. of teeth

t_w = 2 for velocity ratio between 12-36

Therefore, t_g= VR x t_w=24 x 2 = 48 which is greater than 29, hence O.K.

Step 2. Selecting lead angle λ and pressure angle φ_n

Lead angle $\lambda = 6^o$ per worm tooth,

Therefore, $\lambda = 6 \times 2 = 12^o$

But, for compact design

$\lambda = \tan^{-1}\sqrt[3]{\frac{Ng}{Nw}} = \tan^{-1}\sqrt[3]{\frac{1}{24}} = 19.1°$

Therefore, assuming $\lambda = 20^o$ and $\varphi_n = 22.5^o$ (normally used)

Step 3. Determining pitch diameter and pitch line velocity of worm gear

$D_g = mt_g = 48$ m

Let, N_w = 900 rpm (driven by electric motor)

And, Vp = $\frac{\pi DpNg}{1000\times60}$== $\frac{\pi\times48\times37.5}{1000\times60}$ = 0.094 m/sec (since Ng =$\frac{900}{24}$ = 37.5rpm)

Step 4. Determining the design power and the tangential tooth load Ft

Pd = Pr× K_l where K_l = 1.75

Therefore P_d = .746 × 1.75 = 1.3055kW.

Ft = $\frac{Pd}{Vp}$ =$\frac{1305.5}{0.094m}$ = $\frac{13.89\times1000}{m}$ N

Step 5. Beam Strength F_B (by Lewis Equation)

$F_B = S_oC'v\ b\gamma m$ where So = 84MPa (for gear) SAE 65 phosphor bronze

So = 350MPa (for worm) SAE 2320 case hardened

$C'v = 0.75$ (trial value)

$b = 2.38\ P_c$ where P_c = circular pitch = $\pi m = 2.38 \times \pi \times m = 7.48m$

$\gamma = 0.314 + 0.0151(22.5^o - 14.5^o) = 0.435$

$F_B = 84 \times .75 \times 7.48m \times 0.435m = 205m^2$

Step 6. Selecting standard module

Equating F_B to Ft ,we get

$205m^2 = \frac{13.89 \times 1000}{m}$

$m = 4.07mm$

selecting standard module m=5

Step 7. Calculating D_g , V_p, F_t

$D_g = mt_g = 5 \times 48 = 240mm$

$b = 2.38\pi \times 5 + 6.25 = 43.63mm$

$V_p = 0.094m = 0.094 \times 5 = 0.47m/sec.$

$Ft = \frac{13890}{5} = 2778N$

$C'v = \frac{6}{6+Vp} = \frac{6}{6+0.47} = 0.93$

Since calculated is more than assumed hence design is OK

$F_B = 84 \times 0.93 \times 7.48 \times 0.435 \times 52 = 6.35 \times 10^3 N$

Since F_B is greater than Ft hence design is OK

Step 8. Pitch dia. of worm (D_w),mm

$D_w = 2.4 \times \times 5 + 27.5 = 65.2$ mm

Also, $D_w < \frac{c\text{^}0.875}{1.132} = \frac{225\text{^}0.875}{1.132} = 101mm$

$D_w > \frac{c\text{^}0.875}{2} = \frac{225\text{^}0.875}{2} = 57mm$

Since $D_w = 65.2mm$ fits to the range $101 > D_w > 57mm$ hence taking

$D_w = 65.2mm$

Step 9. Calculating the dynamic load on gear F_d ,

$F_d = \frac{Ft}{C'v} = \frac{2778}{0.93} = 2987N$

Step 10. Calculating the limiting wear strength F_w ,

$F_w = D_g \times b \times K_2$

$= 240 \times 43.67 \times 0.70 = 7336.56N$

Since, $F_w > F_d$ hence design is safe.

Step 11. Calculate face length

$L_w = (4.5 + 0.02t_w)P_c$

$= (4.5 + 0.02 \times 2)\pi \times 5 = 71$

Dimensions of worm and gear are:

$D_W = 65.2mm$	$D_g = 240mm$
$L_W = 71mm$	$b = 43.67mm$
$t_g = 2$	$m = 5$

7.4. Felt Conveyor:

- The felt is made up of nylon net – 40 mesh
- Approx. length - 3.9m – 4m
- Width – 330.2 mm

7.5. Details of the driving System

7.5.1 Electric Motor and the integrated Gear Box

- Motor – 1 HP, A.C., 3-phase, 900 rpm
- Gear-box – 42:1 speed reduction, attached to motor

7.5.2 Belt and pulleys

- Speed increment ratio – 1:2
- Belt – ‘V’ shaped, Leather, B-type, 460 mm long
- Small pulley – attached to roller, dia. 76.2 mm
- Big pulley – attached to motor, dia. 152.4 mm

CHAPTER 8 : MAIN ASSEMBLY

8.1. Assembly Specification:

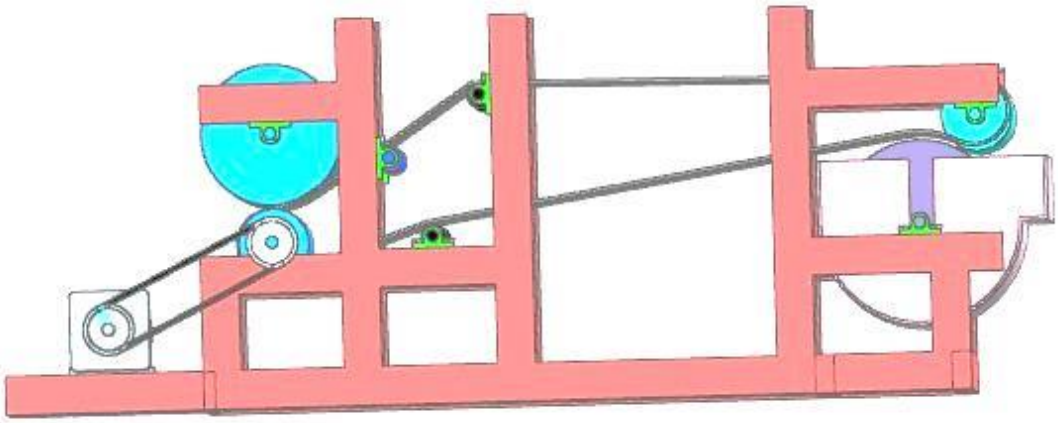

(a)

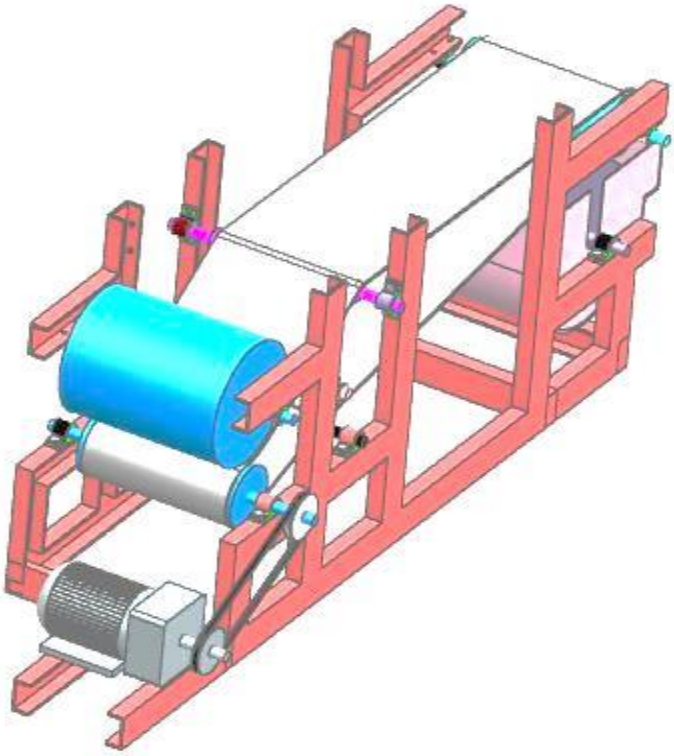

(b)

Figure 5 : (a) Main Assembly 2 D view
(b) Main Assembly 3 D View

Table 4 : Component List

1.	Sieve drum case	1	M.S sheet, 2mm thick
2.	Sieve Drum	1	M.S. , mm thick
3.	Pickup roller	1	M.S 5mm thick with rubber coat
4.	Calendar drum (big)	1	M.S. , 5mm thick
5.	Calendar drum (small)	1	M.S , 5mm thick with rubber coat
6.	Idlers	5	M.S.
7.	Body frame	1	M.S. Channels
8.	Felt Conveyor belt	1	Nylon
9.	AC Motor with Gear box	1	-
10.	Pulleys	2	Cast Iron
11.	V-belt (B-type)	1	Leather
12.	Pedestal Bearings	18	-
13.	Tensile Springs	4	Carbon Steel

Table 5 : Cost Analysis

S no	Component	Quantity	Cost (in Rs)
1.	Sieve drum case	1	300 /-
2.	Sieve Drum	1	1200 /-
3.	Pickup roller	1	800 /-
4.	Calendar drum (big)	1	1000 /-
5.	Calendar drum (small)	1	800 /-
6.	Idlers	5	1500 /-
7.	Body frame	1	3000 /-
8.	Felt Conveyor belt	1	1000/-
9.	AC Motor with Gear box	1	8000 /-
10.	Pulleys	2	300 /-
11.	V-belt (B-type)	1	500 /-
12.	Pedestal Bearings	18	7200 /-
13.	Tensile Springs	4	1200/-
	Total		26800/-

CHAPTER 9 : Advantages & Disadvantages

Advantages

- Low cost of operation
- Low cost for development
- Easy to transport
- Suitable for small industries
- Simple operation
- Easy maintenance
- Recycling saves the Earth.
- Recycling conserves energy.
- Recycling minimizes waste products placed in landfills.
- Recycling can help you save money.
- Recycling of waste paper is beneficial not only from economic point of view but also for the protection of environment.

Disadvantages

- Recycling can create more environmental problems, if not done right.
- Recycling can increase low quality jobs.
- Recycling is not always cost-efficient.

CHAPTER 10 : Conclusion

We have designed a **Compact Paper Recycling Machine.** In which we have designed a gear box of speed reduction 42 :1 which further consists of a worm gear drive and a spur gear drive.

The machine is driven by a 1 HP A.C. three phase motor having speed 900 rpm.

We have also analysed the list of components used in our machine and so the cost and the cost coming out to be around Rs 26,800/-

REFERENCES

[1] Amol A. Kalage et-all(2009), FPGA based direct torque control of Induction motor drive, International Journal of Recent Trends In Engineering, Vol.1 No.4.

[2] Ajit K Ghosh (2011), Fundamentals of Paper Drying-Theory and Application from Industrial Perspective.

[3] Antonio Davila (1988), an evaluation of quantification methods for plastics.

[4] Antonio Davila et-al (1996), Evaluation of floatation and washing processes in Deinking Old Newsprint and Office Waste.

[5] C. Jiang and J. Ma (2000), Deinking of waste paper: Floatation, Copyright 2000 Academic Press.

[6] Dr. Ravi Goyal, Anurag Joshi et-all (2015), Cold rolling mill roll deformation

[7] R.A. Venditti et-all (2016), Natural Surfactants for Flotation Deinking in paper recycling, UoG, Mexico.

[8] Devendra Kumar and R.K. Mandloi (2016), Belt conveyors.

[9] Freedonia Group (2008), Pulp and Paper chemicals

[10] Gary M. Scott (1995), Sludge characteristics and disposal alternatives for r ecycled fibre plants

[11] Gary M. Scott and Said Abubakr (1994), Fractionation of secondary fibre- A Review

[12] Gitesh D. Kapse, Nitesh T. Chandekar, et-all(2016), Fabrication of recycling machine, International Journal for Scientific Research & Development Vol. 4, Issue 02.

[13] Government of India (2011), Discussion paper on collection and recycling of waste in India

[14] Iveta Čabalová et-al (2011), The Effects of Paper Recycling and its Environmental Impact

[15] Kirabira John Baptist et-al(2013),A Review on Pulp Manufacture from Non Wood Plant Materials

[16] Patricia Lynn Brown (2004), Case study on White paper recycling, Oklahoma State University.

[17] M.A. Olutoye (2005), Design of manually operated paper recycling machine, Leonardo Electronic Journal of Practices and Technologies.

[18] Metin Yılmaz (2016), Recycling costs: A research in the waste paper industry